MESSRS.

SPECIFICATION FOR APPROVAL

承　　認　　書

Product	DYNAMIC SPEAKER
Part No.	AK-2132JA-0
Customer Approval	

Approved By	Checked By	Made By

ADVANCED ACOUSTIC TECHNOLOGY CORP.

苙 翔 科 技 股 份 有 限 公 司

ISO 9001 Certified

2F, No.207, Sec. 6,Chung Shan N. Rd., Taipei, Taiwan, R.O.C.

Tel: +886-2-88665255 Fax: +886-2-88665250

E-mail: aat_mail@seed.net.tw

File Name:

AK-2132JA-0

01	Type	Dynamic speaker	
02	Dimension	External diameter 21 mm	
03	Rated Input Power	0.1 W	
04	Impedance	32 ohm ± 15% at 1500Hz	
05	Resonance Frequency (Fo)	1000 Hz ± 20% at Fo, 1V	
06	Sensitivity (S.P.L.)	73dB(W/m) ± 3 dB	at AVE 1.5K,2.0K,2.5K,3.0K(Hz).
		83dB(0.1W/0.1m) ± 3 dB	
07	Frequency Range	Fo – 5KHz	
08	Distortion	Less than 10 % at 1500Hz 0.1W	
09	Max. Input Power	Must be normal at 0.2W white noise for 1 minute.	
10	Voice Coil	Diameter 6 mm	
11	Magnet	Rare earth permanent (Ferrite) magnet Φ15.5 Xφ6.5 x 1.5mm	
12	Weight	3 ± 0.5 g	
13	Appearance	Should not exist any obstacle to be harmful to normal operation; damages, cracks, rusts and distortions, etc.	
14	Operation Test	Must be normal at program source –0.1W	
15	Buzz, Rattle, etc.	Should not be audible at 1.78V sine Wave between Fo to 20KHz	
16	Polarity	When positive voltage is applied to the terminal marked (+), diaphragm should move to the front.	
17	Terminal Strength	Capable of withstand 1kg load for 30 seconds without resulting in any damage or rejection.	
18	Load Test	0.1 W white noise is applied for 96 hours and satisfy the test listed on item 05,06,13,15	
19	High Temp. Test	Keep 96 hours at +70℃±3℃ and leave 3 hours in normal temperature and then check	
20	Low Temp. Test	Keep 96 hours at -20℃±3℃ and leave 3 hours in normal temperature and then check	
21	Humidity Test	Keep 96 hours at + 60℃±3℃ relative humidity 95% and leave 3 hours in normal temperature and then checked.	
22	Drop Test	Drop the speakers contained in normal box onto the board 20mm thick 10 times from the height of 0.75m and then should satisfy the test listed on item 13 and 15	

Measurement Condition

Test and measurement will be carried out under normal condition of temperature

within 5℃ to 35℃ ,relative humidity within 45% to 85% and air pressure of 860mbar to 1060mbar.

Should uncertainly arise in data obtained from the above atmosphere, control of temperature

At 20℃±2℃ and relative humidity within 60% and 70%, with air pressure remaining unchanged,

To be enforced.

1.Microphone : B&K 4191
2.Standard Baffle : In IEC 268-5 Where 1350mm x 1650mm
3.Testing Distance : 0.1m
4.Zero Level : -dB
5.Mode : SPEAKER
6.Input Power : 0.1W
7.potentiometer Range : 50dB
8.Sweep Time : 0.5sec

Standard test condition of speaker

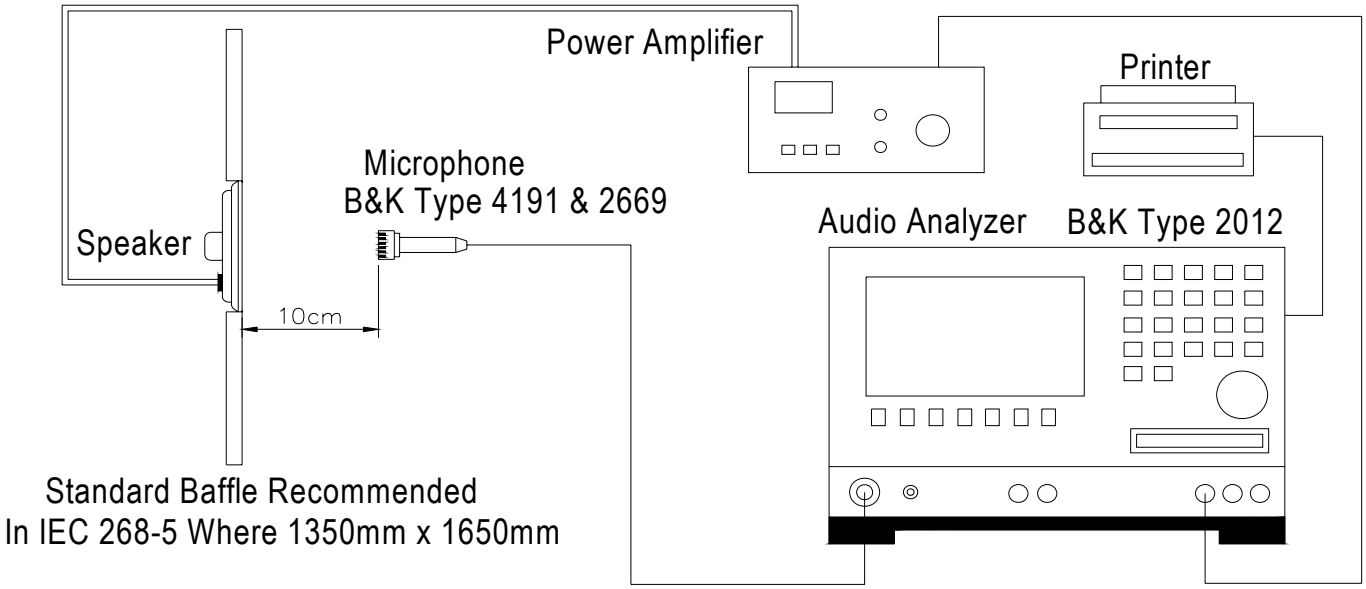

Frequency Response Curve

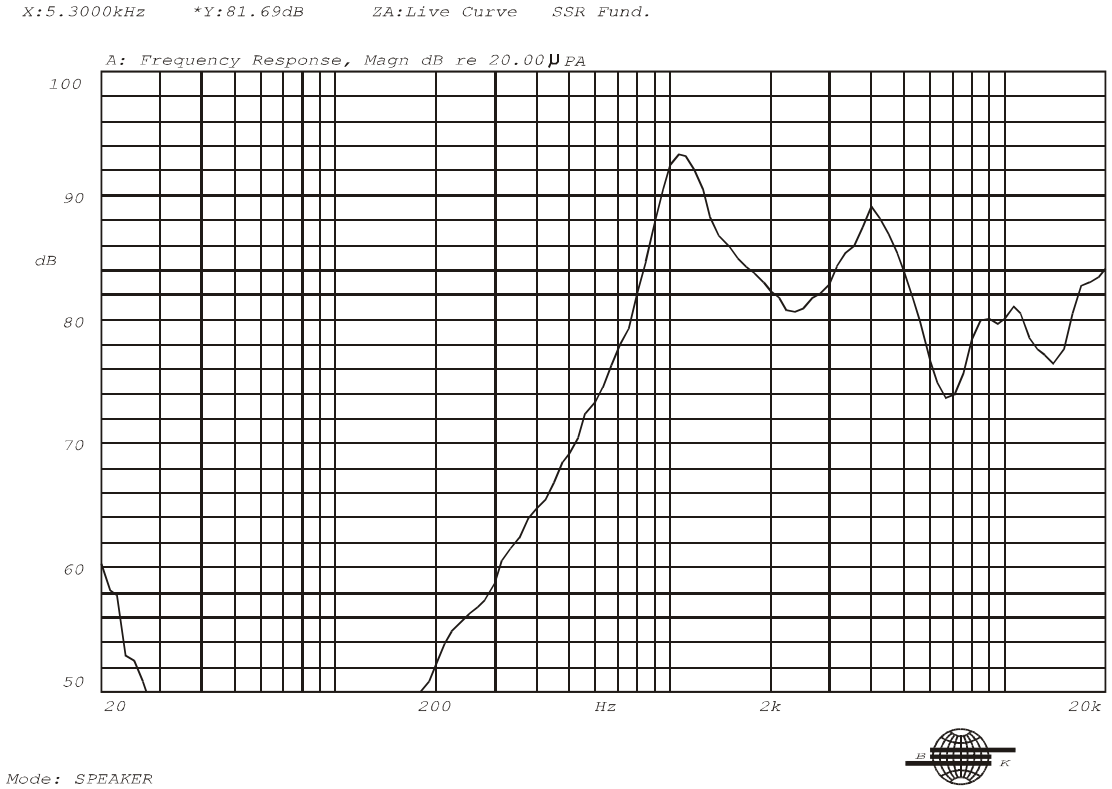

Impedance Curve

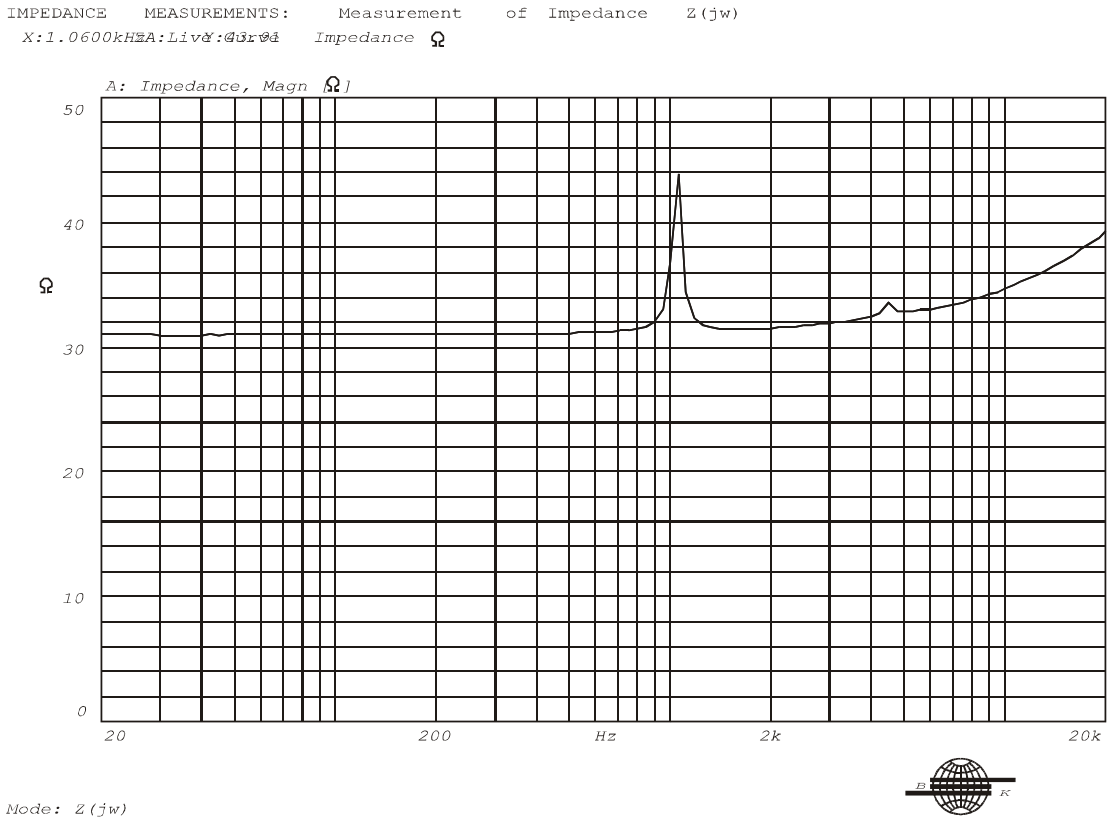

REV NO.	REVISION NOTE	APPROVAL	DATE

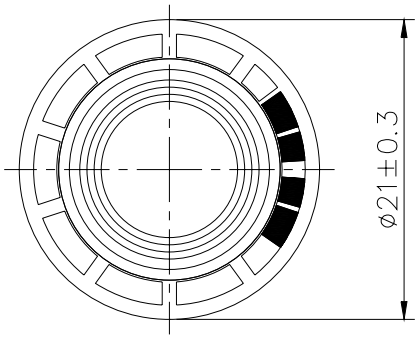

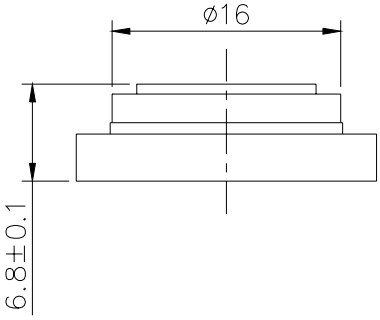

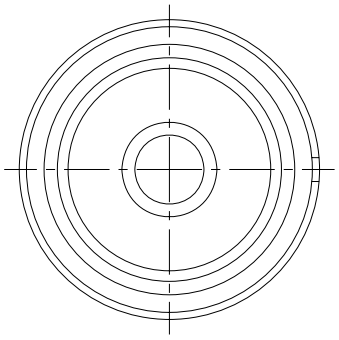

TITLE: DYNAMIC SPEAKER	DRAWN: Milton 03/01/2002	SCALE: 2:1	SHEET: 1 of 1
PART NO. AK-2132JA-0	DESIGNED: R&D OF AAT	UNITS: mm	
	CHECKED:	TOLERANCE ± 0.2	
DWG NO. DTS-1209	APPROVAL:	UNLESS OTHERWISE SPECIFIED: ONE PLACE DECIMAL ± *** TWO PLACE DECIMAL ± *** THREE PLACE DECIMAL ± ***	
1 REV	MATERIAL: *****		

茁翔科技股份有限公司
ADVANCED ACOUSTIC TECHNOLOGY CORPORATION